弹簧式PCB接线端子
PCB SPRING TERMINAL BLOCK

ISO14001 ISO45001 ISO9001 ISO80079-34 ISO/TS 22163

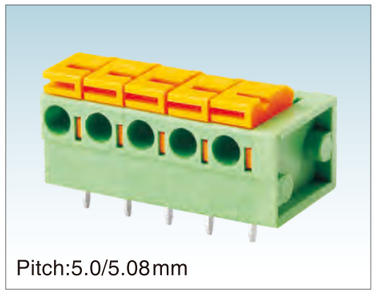

Pitch:5.0/5.08mm

142R-5.0/5.08

UL/CUL 技术参数
UL/CUL Technical Data

等级	Use Group	B	C	D
额定电压	Rated Voltage [V]	300	-	300
额定电流	Rated Current [A]	10	-	10
接线范围 Wire Range	单芯线 Solid [AWG]	24~14		
	多芯线 Stranded [AWG]	24~14		
耐电压	Dielectric Voltage-Withstand	1.6KV		

IEC 技术参数
IEC Technical Data

过电压类别	Overvoltage Category	Ⅲ	Ⅲ	Ⅱ
污染等级	Contamination Class	3	2	2
额定电压	Rated Voltage [V]	320	320	630
额定电流	Rated Current [A]	15	15	15
额定冲击电压	Impulse withstand voltage [KV]	4	4	4
导线截面积 Conductor cross section	硬质导线 Solid[mm²]	0.2~1.5		
	柔性导线 Flexible[mm²]	0.2~1.5		

材料 Material

绝缘材料	Insulation Material	PA66
阻燃等级	Flame retardant rating	UL94V-0
导体材料	Conductor Material	Copper alloy
导体表面镀层	Plating of conductor surface	Sn plated

一般参数 Other Data

间距/极数	Pitch/Poles [mm]/[P]	5.0,5.08/1~30
剥线长度	Stripping Length [mm]	10~11
螺丝/扭矩	Screw/Torque(Max)[N.m]	/
工作温度	Operating temperature[℃]	-40~+105
焊锡温度	Soldering temperature	260℃/5S
引针尺寸	Pin dimensions [mm]	1.0*0.5
PCB板孔径	PCB Hole Diameter [mm]	∅1.4

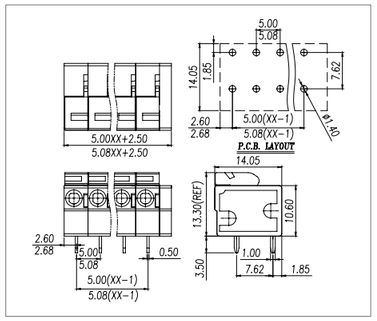

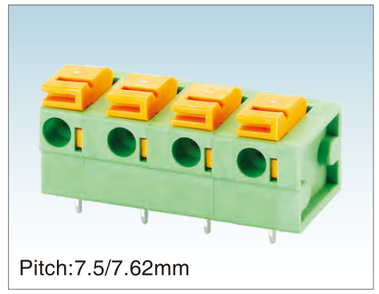

Pitch:7.5/7.62mm

142V-7.5/7.62

UL/CUL 技术参数
UL/CUL Technical Data

等级	Use Group	B	C	D
额定电压	Rated Voltage [V]	300	-	300
额定电流	Rated Current [A]	10	-	10
接线范围 Wire Range	单芯线 Solid [AWG]	24~14		
	多芯线 Stranded [AWG]	24~14		
耐电压	Dielectric Voltage-Withstand	1.6KV		

IEC 技术参数
IEC Technical Data

过电压类别	Overvoltage Category	Ⅲ	Ⅲ	Ⅱ
污染等级	Contamination Class	3	2	2
额定电压	Rated Voltage [V]	500	630	1000
额定电流	Rated Current [A]	15	15	15
额定冲击电压	Impulse withstand voltage [KV]	6	6	6
导线截面积 Conductor cross section	硬质导线 Solid[mm²]	0.2~1.5		
	柔性导线 Flexible[mm²]	0.2~1.5		

材料 Material

绝缘材料	Insulation Material	PA66
阻燃等级	Flame retardant rating	UL94V-0
导体材料	Conductor Material	Copper alloy
导体表面镀层	Plating of conductor surface	Sn plated

一般参数 Other Data

间距/极数	Pitch/Poles [mm]/[P]	7.5,7.62/2~24
剥线长度	Stripping Length [mm]	10
螺丝/扭矩	Screw/Torque(Max)[N.m]	/
工作温度	Operating temperature[℃]	-40~+105
焊锡温度	Soldering temperature	260℃/5S
引针尺寸	Pin dimensions [mm]	1.0*0.5
PCB板孔径	PCB Hole Diameter [mm]	∅1.4

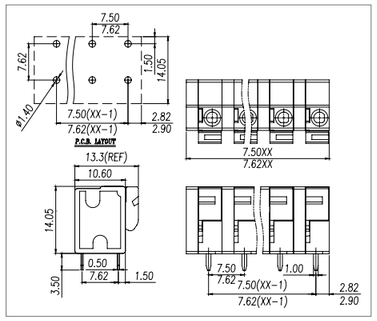

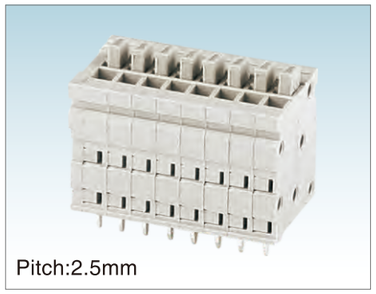

Pitch:7.5/7.62mm

142R-7.5/7.62

UL/CUL 技术参数
UL/CUL Technical Data

等级	Use Group	B	C	D
额定电压	Rated Voltage [V]	300	-	300
额定电流	Rated Current [A]	10	-	10
接线范围 Wire Range	单芯线 Solid [AWG]	24~14		
	多芯线 Stranded [AWG]	24~14		
耐电压	Dielectric Voltage-Withstand	1.6KV		

IEC 技术参数
IEC Technical Data

过电压类别	Overvoltage Category	Ⅲ	Ⅲ	Ⅱ
污染等级	Contamination Class	3	2	2
额定电压	Rated Voltage [V]	500	630	1000
额定电流	Rated Current [A]	15	15	15
额定冲击电压	Impulse withstand voltage [KV]	6	6	6
导线截面积 Conductor cross section	硬质导线 Solid[mm²]	0.2~1.5		
	柔性导线 Flexible[mm²]	0.2~1.5		

材料 Material

绝缘材料	Insulation Material	PA66
阻燃等级	Flame retardant rating	UL94V-0
导体材料	Conductor Material	Copper alloy
导体表面镀层	Plating of conductor surface	Sn plated

一般参数 Other Data

间距/极数	Pitch/Poles [mm]/[P]	7.5,7.62/2~24
剥线长度	Stripping Length [mm]	10~11
螺丝/扭矩	Screw/Torque(Max)[N.m]	/
工作温度	Operating temperature[℃]	-40~+105
焊锡温度	Soldering temperature	260℃/5S
引针尺寸	Pin dimensions [mm]	1.0*0.5
PCB板孔径	PCB Hole Diameter [mm]	∅1.4

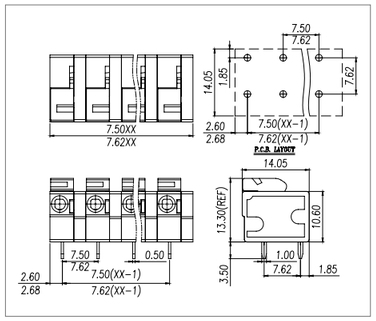

Pitch:2.5mm

211V-2.5

UL/CUL 技术参数
UL/CUL Technical Data

等级	Use Group	B	C	D
额定电压	Rated Voltage [V]	150	-	-
额定电流	Rated Current [A]	5	-	-
接线范围 Wire Range	单芯线 Solid [AWG]	26~18		
	多芯线 Stranded [AWG]	26~18		
耐电压	Dielectric Voltage-Withstand	1.3KV		

IEC 技术参数
IEC Technical Data

过电压类别	Overvoltage Category	Ⅲ	Ⅲ	Ⅱ
污染等级	Contamination Class	3	2	2
额定电压	Rated Voltage [V]	63	160	320
额定电流	Rated Current [A]	6	6	6
额定冲击电压	Impulse withstand voltage [KV]	2.5	2.5	2.5
导线截面积 Conductor cross section	硬质导线 Solid[mm²]	0.2~0.5		
	柔性导线 Flexible[mm²]	0.2~0.5		

材料 Material

绝缘材料	Insulation Material	PA66
阻燃等级	Flame retardant rating	UL94V-0
导体材料	Conductor Material	Copper alloy
导体表面镀层	Plating of conductor surface	Sn Plated

一般参数 Other Data

间距/极数	Pitch/Poles [mm]/[P]	2.5/1-30
剥线长度	Stripping Length [mm]	11
螺丝/扭矩	Screw/Torque(Max)[N.m]	/
工作温度	Operating temperature[℃]	-40~+105
焊锡温度	Soldering temperature	260℃/5S
引针尺寸	Pin dimensions [mm]	0.7*0.4
PCB板孔径	PCB Hole Diameter [mm]	∅1.0

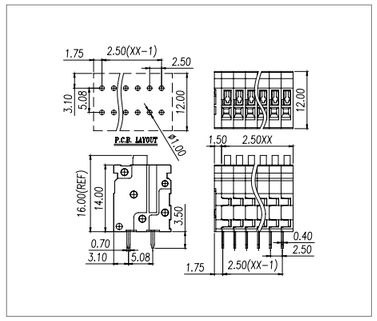

Pitch:2.54mm

211V-2.54

UL/CUL 技术参数
UL/CUL Technical Data

等级	Use Group	B	C	D
额定电压	Rated Voltage [V]	150	-	-
额定电流	Rated Current [A]	5	-	-
接线范围 Wire Range	单芯线 Solid [AWG]	26~18		
	多芯线 Stranded [AWG]	26~18		
耐电压	Dielectric Voltage-Withstand	1.3KV		

IEC 技术参数
IEC Technical Data

过电压类别	Overvoltage Category	Ⅲ	Ⅲ	Ⅱ
污染等级	Contamination Class	3	2	2
额定电压	Rated Voltage [V]	63	160	320
额定电流	Rated Current [A]	6	6	6
额定冲击电压	Impulse withstand voltage [KV]	2.5	2.5	2.5
导线截面积 Conductor cross section	硬质导线 Solid[mm²]	0.2~0.5		
	柔性导线 Flexible[mm²]	0.2~0.5		

材料 Material

绝缘材料	Insulation Material	PA66
阻燃等级	Flame retardant rating	UL94V-0
导体材料	Conductor Material	Copper alloy
导体表面镀层	Plating of conductor surface	Sn plated

一般参数 Other Data

间距/极数	Pitch/Poles [mm]/[P]	2.54/1~30
剥线长度	Stripping Length [mm]	11
螺丝/扭矩	Screw/Torque(Max)[N.m]	/
工作温度	Operating temperature[℃]	-40~+105
焊锡温度	Soldering temperature	260℃/5S
引针尺寸	Pin dimensions [mm]	0.7*0.4
PCB板孔径	PCB Hole Diameter [mm]	∅1.0

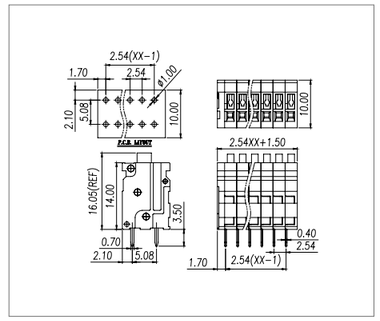

Pitch:2.5mm

211R-2.5

UL/CUL 技术参数
UL/CUL Technical Data

等级	Use Group	B	C	D
额定电压	Rated Voltage [V]	150	-	-
额定电流	Rated Current [A]	5	-	-
接线范围 Wire Range	单芯线 Solid [AWG]	26~18		
	多芯线 Stranded [AWG]	26~18		
耐电压	Dielectric Voltage-Withstand	1.3KV		

IEC 技术参数
IEC Technical Data

过电压类别	Overvoltage Category	Ⅲ	Ⅲ	Ⅱ
污染等级	Contamination Class	3	2	2
额定电压	Rated Voltage [V]	63	160	320
额定电流	Rated Current [A]	6	6	6
额定冲击电压	Impulse withstand voltage [KV]	2.5	2.5	2.5
导线截面积 Conductor cross section	硬质导线 Solid[mm²]	0.2~0.5		
	柔性导线 Flexible[mm²]	0.2~0.5		

材料 Material

绝缘材料	Insulation Material	PA66
阻燃等级	Flame retardant rating	UL94V-0
导体材料	Conductor Material	Copper alloy
导体表面镀层	Plating of conductor surface	Sn plated

一般参数 Other Data
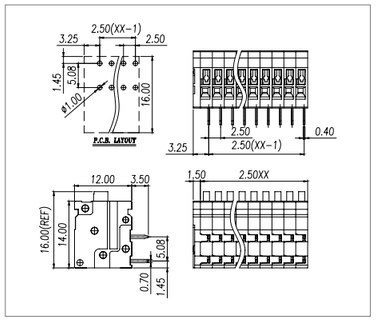
间距/极数	Pitch/Poles [mm]/[P]	2.5/1~30
剥线长度	Stripping Length [mm]	11
螺丝/扭矩	Screw/Torque(Max)[N.m]	/
工作温度	Operating temperature[℃]	-40~+105
焊锡温度	Soldering temperature	260℃/5S
引针尺寸	Pin dimensions [mm]	0.7*0.4
PCB板孔径	PCB Hole Diameter [mm]	∅1.0