Board Type Digital Temperature Controller

BX8

INSTRUCTION MANUAL

Thank you for purchasing Hanyoung Nux products. Please read the instruction manual carefully before using this product, and use the product correctly.
Also, please keep this instruction manual where you can view it any time.

HANYOUNG NUX

HANYOUNGNUX CO.,LTD
28, Gilpa-ro 71beon-gil, Michuhol-gu, Incheon, Korea TEL : +82-32-876-4697
http://www.hanyoungnux.com

MA0204KE211029

Safety information

Please read the safety information carefully before the use, and use the product correctly.
The alerts declared in the manual are classified into **Danger, Warning** and **Caution** according to their importance

⚠ **DANGER**	Indicates an imminently hazardous situation which, if not avoided, will result in death or serious injury
⚠ **WARNING**	Indicates a potentially hazardous situation which, if not avoided, could result in death or serious injury
⚠ **CAUTION**	Indicates a potentially hazardous situation which, if not avoided, may result in minor injury or property damage

⚠ DANGER

The input/output terminals are subject to electric shock risk. Never let the input/output terminals come in contact with your body or conductive substances.

⚠ WARNING

- The contents of this manual may be changed without prior notification.
- Any use of the product other than those specified by the manufacturer may result in personal injury or property damage.
- If there is a possibility that a malfunction or abnormality of this product may lead to a serious accident, install an appropriate protection circuit on the outside and plan for preventing accidents.
- Since this product is not equipped with a power switch and fuse, install them separately on the outside (fuse rating: 250 VAC 0.5 A).
- Please supply the rated power voltage, in order to prevent product breakdowns or malfunctions.
- To prevent electric shocks and malfunctions, do not supply the power until the wiring is completed.
- The product does not have an explosion-proof structure, so avoid using it in places with flammable or explosive gases.
- Never disassemble, modify, process, improve or repair this product, as it may cause abnormal operations, electric shocks or fires.
- Do not touch the terminals to avoid electrical shock or malfunction.
- Please disassemble the product after turning OFF the power. Failure to do so may result in electric shocks, product abnormal operations or malfunctions.
- We recommend regular maintenance for the continuous safe use of this product.Some components of this product may have a lifespan or deteriorate over time.
- The warranty period of this product, is 1 year, including its accessories, under normal conditions of use.

⚠ CAUTION

- The ambient temperature exceeds 0 ~ 50 °C
- The ambient humidity exceeds 20 ~ 90 % RH.
- Places where temperature changes suddenly or condensation occurs.
- Places exposed to corrosive gases (especially harmful gases, ammonia, etc.) or flammable gases.
- Places where vibrations and impacts are applied directly to the product body.
- Places with liquids, oils, chemicals, steams, sunlight.
- Places with a lot of dirt, dust, salt, iron.
- Places where large inductive disturbance, static electricity, magnetic noise can be generated easily.
- Places where heat accumulation occurs due to radiant heat, etc.
- This controller does not have outer case and is only composed of PCB (printed circuit board)so you need special attention when you install it to panel. Especially, when insulated against iron plate, and oil or water leak inside the panel, there is danger of fire, so inspection is required.
- Use the predetermined compensating cable with thermocouple.
- For RTD input use a cable with small lead wire resistance and without resistance difference among 3 wires.
- To avoid the inductive noise influence, separate input signal wires from the power and load wires.
- Keep input wires away from output signal wires and be sure to use shielded wires to ground.
- In places with a lot of noise, use the following procedure: connect a surge absorber to the connector coil side if the magnet connectors are connected to the relay contact output load.
- When there is a lot of noise from the power, we recommend to use insulation transformer and noise filter. Please install the noise filter to a grounded panel or structure, etc. and make the wiring of noise filter output and product power supply terminals as short as possible.
- The product power cables are effective when twisted and connected (tightly twisting the power cables is effective against noise)
- For the heater break alarm, the heater power supply and the controller power supply should be connected using the same power cables when a heater break alarm.
- The preparation period of the contact output is required during power supply. If used as a signal to external interlock circuit, etc. please use a delay relay together.
- Be careful during wiring, as this product has a narrower distance among terminals, compared with other products.
- As the connection between the main board and the display board of this product is a signal line,please install after taking into consideration the insulation relationships, so that there is not noise influence.
- If the operation frequency such as proportional operation is high, connecting the load with the output relay rating without room will shorten the service life, so use an extra relay. In this case,SSR output type is recommended.
  - · When using electromagnetic switch: the proportional cycle is at least 30 seconds
  - · When using SSR: he proportional cycle is at least 1 second
  - · Contact output life : Mechanical: min. 10 million times (no load) Electrical: min. 100 thousand times (rated load)
- SSR/current output: not electrically insulated from internal circuit.
- If the alarm function is not set correctly, it will not be output in case of abnormal operation,so please check it before operation.
- When the input (sensor) is disconnected, "b.out" will be displayed on PV display. When replacing the sensor, be sure to turn off the powery.

Suffix code

Model	Code	Information
BX8-	□ ⋮ □	48×48 ㎜ Board Type Digital Temperature Controller
Control Type	0 ⋮	Normal Type
	1 ⋮	Heating/Cooling
Optional	0	SV2/SV3
	1	HBA
	2	RS485
	3	HBA/RS485

Specification

■ Input

Input	Thermocouple: K, J, E, T, R, B, S, L, N, U, WRe 5-26, PL- II RTD : Pt100 Ω, KPt100 Ω. Direct voltage : 1 - 5 V, -10 - 20 ㎷, 0 - 100 ㎷ (free scale)
Sampling cycle	250 ㎳
Input resolution	Below decimal point of measurement range
Input impedance	Thermocouple and ㎷ input: min. 1 ㎆, DC V: 1 ㎆
Allowable signal source resistance	Thermocouple : max. 250 Ω, Voltage : max. 2 kΩ
Lead wire tolerable resistance	RTD: max. 10 Ω / 1 wire (but the conductor resistance among 3 wires should be the same)
Input tolerable voltage	within ±10 V (T/C, RTD, Voltage : ㎷ DC), ±20 V (Voltage : VDC)
Noise removal rate	NMRR (Normal mode) : min. 40 dB (50/60 ㎐ ±1 %) CMRR (Common mode) : min. 120 dB (50/60 ㎐ ±1 %)
Standard	T/C, RTD : KS, IEC, DIN
Standard junction temp. compensation tolerance	±1.5 °C (15 ~ 35 °C), ±2.0 °C (0 ~ 50 °C)
BURN-OUT	T/C: OFF, UP/DOWN scale selectable. RTD : UP Scale (detection current at thermocouple and RTD BURN-OUT: approx. 50 nA)
Accuracy	±0.5 % (FULL SCALE)
Input range	T/C and RTD are changeable within range of input signal and measurement range. DC voltage: min. voltage and max. voltage are changeable within each measurement range. Scaling available in the measurement range conditions

■ Output

Retransmission output		·Resolution : Approx. 3,000 ·Sampling cycle : 250 ㎳ ·Accuracy : ±0.5 % of max. scale (4 - 20 ㎃ range)
Alarm output		·Contact: 1a ·Point: 1 point ·Output points: Refer to "Terminal Arrangement"
Control output	Relay contact output	·Time resolution : 0.1 % or 10 ㎳ (the smaller) ·Proportional cycle : 1 ~ 1000 sec. ·Output operation : time proportional, ON/OFF ·Output limit : 0.0~100.0 % range, high limit(OH) or low limit(OL) (selectable also during AT) ·ON/OFF hysteresis : 0 ~ 100 % (Full scale)
	SSR voltage pulse output	·Proportional cycle: 1 ~ 1,000 sec. ·OFF voltage: max. 0.1 V d.c. ·Output operation: time proportional ·Time resolution: 0.1 % or 10 ㎳ (the smaller) ·Output limit: 0.0~100.0 % range, high limit (OH) low limit(OL) (selectable also during AT)
	Current output (4-20 ㎃)	·Sampling time : 250 ㎳·Output operation : PID control ·Accuracy : ±0.5 % of full scale (4 - 20 ㎃ range), Resolution : Approx. 3,000l ·Output ripple : max. 0.3 % (P-P) of max. scale (150 ㎐) ·Output limit : -5.0 ~ 105.0 % range, high limit(OH) or low limit(OL) selectable also during AT)

※ Output type can be selected from relay, current or SSR, and heating/cooling types can be set individually

Function

Measurement input	·Input correction (Bias) : -100.0 ~ 100.0 % for instrument range (desired correction value can be compensated for measured input value) ·Scaling : The measurement range can be scaled according to the setting of the maximum measurement range (SL-H) and minimum measurement range (SL-L). Filter : OFF, 1 ~ 120 sec.
Control	·Number of PIDs per set value (SV): you can set up to 3 types of set values (SV) and select PID constants for each ·Auto-tuning : According to set value (Standard type, Low PV type) ·Proportional Band : 0.1 ~ 999.9 % (Max. range), 0.0 ~ 999.9 % (During heating - cooling control) ·Integral Time : OFF, 1 ~ 6000 sec. ·Derivative Time : OFF, 1 ~ 6000 sec. ·ON/OFF control : By selecting output code (OT) "0" ·PID selection : Zone PID/Auto 1, 2, 3 selectable ·Manual Reset : -5.0 ~ 105.0 % of output (valid when I=OFF) ·Direct / Reverse action : Changeable by parameter ·Emergency output value : -5.0 ~ 105.0 % of output value (normal type), 0.0~105.0 % (heating/cooling type) ·ON/OFF hysteresis (HYS) : 0.0 ~ 100.0 % of instrument range (valid when ON/OFF control is set) ·Heating/cooling dead band: -100.0 to 50.0% about output value ·Heating-Cooling hysteresis : -100.0 ~ 50.0 % of output value ·ARW (Anti Reset Wind-up) : AUTO, 50.0 ~ 200.0 % ·Fuzzy : ON/OFF selection by parameter ·Ramp: It is possible to set rising temperature and falling temperature gradients in hours or minutes when power is ON.
Retransmission output	·Transmission signal: process value (PV), set value (SV), output value (MV) selectable. Sensor power supply (SPS) 24 V d.c. ·Continuous output (However, when retransmission output is used, the sensor power can not be used) ·Scaling: Indication value, set value
Alarm output	·Set point: depends on specifications of each model (refer to connection diagram) ·Alarm types : High/Low process alarm, High/Low deviation alarm, Hold function of alarm, Heater break alarm (refer to alarm type and code) ·Setting range : Process alarm ..... 0 ~ 100 % of instrument range Deviation alarm ..... -100 ~ 100 % of instrument range ·Alarm hysteresis : 0.0 ~ 100.0 % of instrument range
HBA	·Current measurement range : 1 - 50 A a.c. (resolution: 0.5 A, ±5 % ±1 digit of FS) ·Alarm output : Selectable in alarm output ·Dead band: 0 ~ 100 % of max. range ·HBA is available during ON/OFF control or time proportional output (but not during current output or cooling output) ·Break detection is not possible below 0.2 sec. during output on.

Power supply

Power voltage	100 - 240 V a.c. (Voltage fluctuation rate : ±10 %)
Frequency	50/60 ㎐
Power consumption	Max. 6.0 W, max. 10 VA
Insulation resistance	Between primary terminal and secondary terminal : min. 500 V d.c., 20 ㎆ Between primary terminal and ground : min. 500 V d.c., 20 ㎆ Between ground and secondary terminal : min. 500 V d.c., 20 ㎆
Dielectric strength	Between primary terminal and secondary terminal : 2,300 V a.c. 50/60 ㎐ for 1 min. Between primary terminal and ground : 2,300 V a.c. 50/60 ㎐ for 1 min. Between F•G and secondary terminal : 1,500 V a.c. 50/60 ㎐ for 1 min.
Sensor power supply	24 V d.c. 20 ㎃ (but, it is not available in retransmission output)

Interface

Standard	EIA RS485
Max number of connections	31 addresses can be set from 1 to 99
Communication method	2-wire half-duplex
Synchronization	Asynchronous
Communication sequence	None
Communication distance	Within 1.2 km
Communication speed	600, 1200, 2400, 4800, 9600 BPS (Speed is changeable by parameter setting)
START BIT	1 BIT
DATA BIT	7 or 8 BIT
PARITY BIT	None, even numbers, odd numbers
STOP BIT	1 or 2 BIT
PROTOCOL	PC LINK WITHOUT SUM(0), PC LINK WITH SUM(1)
Response time	Reception handling time + (Response time × 10 ㎳)

Dimension

■ Display

※Cable length basically 300 ㎜

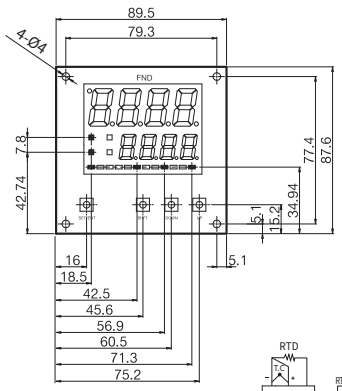

■ Control

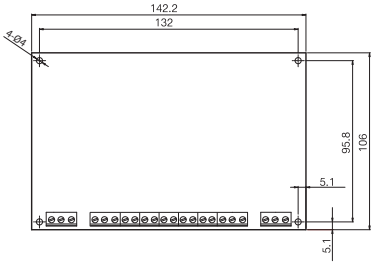

■ Connection diagram

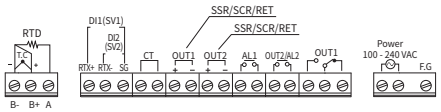
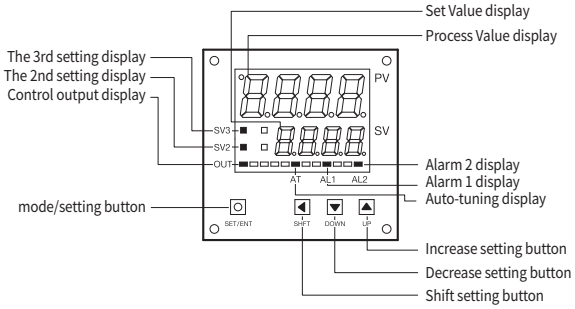
■ Part name